RevNo	Revision note

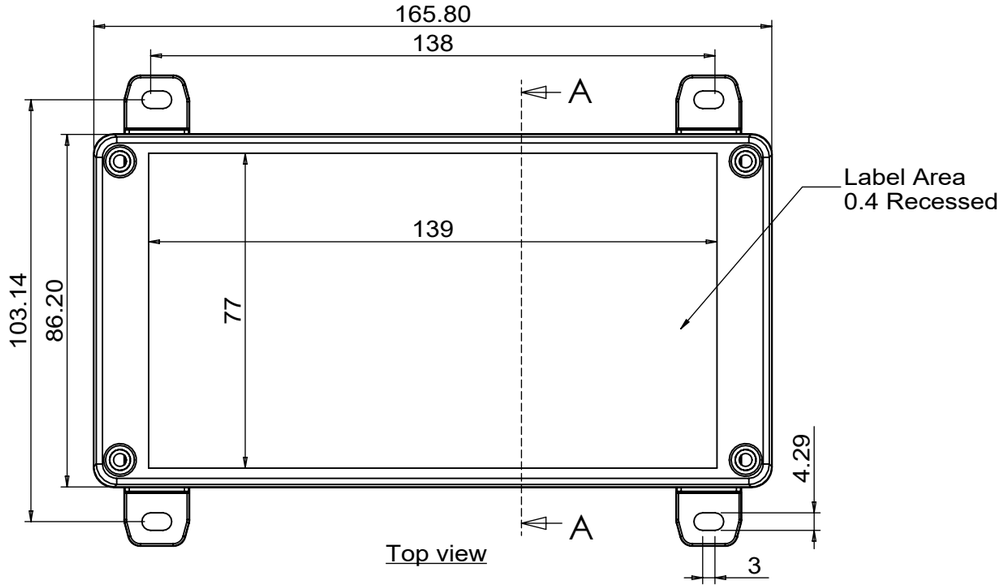

Top view

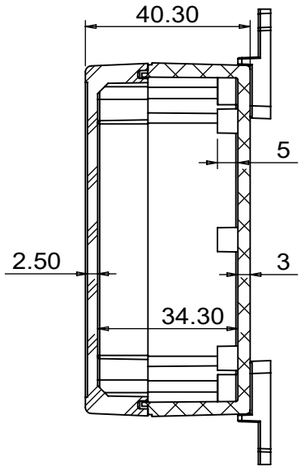

Section A-A

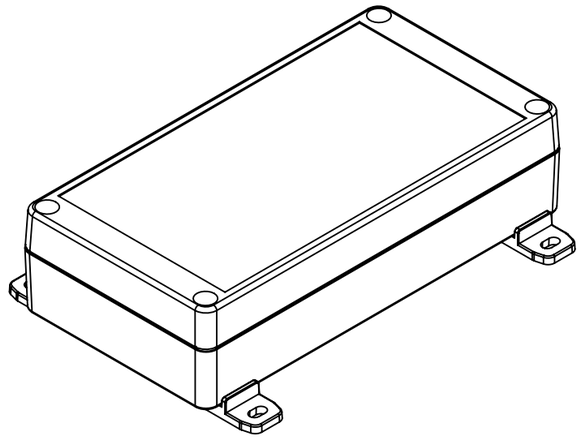

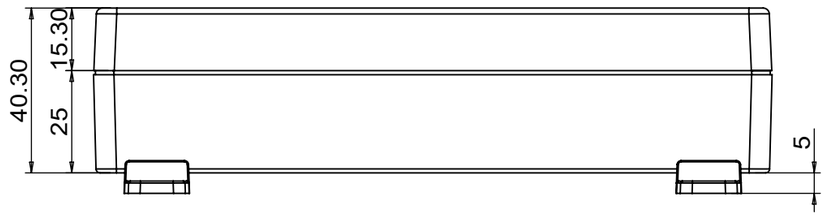

Side view

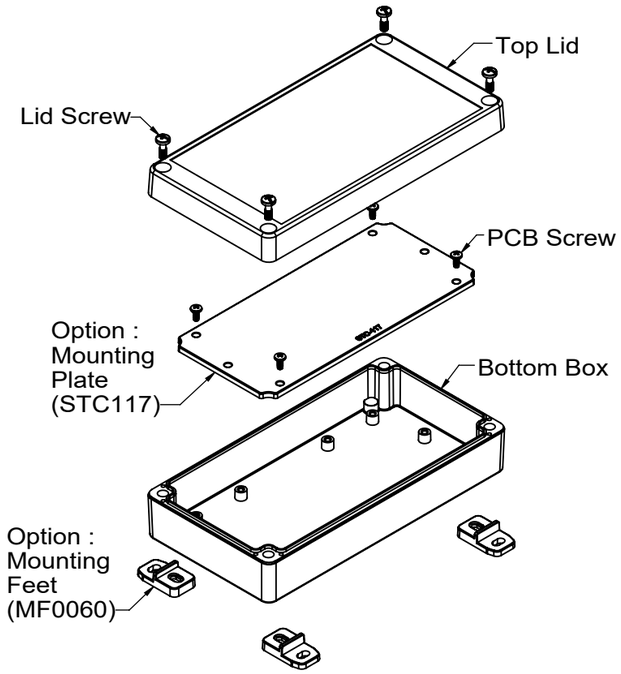

Exploded view

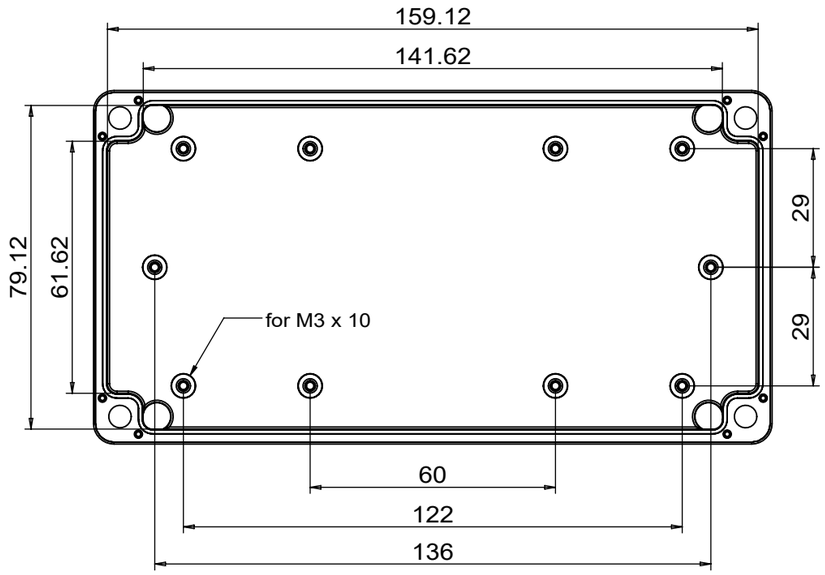

Inner view

RP1160 Sealed Enclosure
Size: 165 x 85 x 40 mm.
Material: Polycarbonate,(UL-94V2).
Color: Off White.
Working temp: -35˚c ~ 130˚c
Waterproof: IP65 / IP67
Supply:
1. Stainless fixing screw x 4 pcs.
2. Gasket x 1.
3. PCB screw x 4 pcs.
Option:
1. RP1160C: PC Clear Lid.
2. Mounting plate: STA117 (Metal).
3. Mounting plate: STC117 (ABS).
4. MF0040: Mounting Feet x 4 pcs.
5. MF0060: Mounting Feet x 4 pcs.
6. RP1170: (165 x 85 x 55 mm)
7. RP1180: (165 x 85 x 85 mm)
8. RP1190: (165 x 85 x 70 mm)

Design	Check	Confirm	File	Date	Scale
William				2020.7.20	

RITEC Enclosures Inc.
10F, 85, Sec. 1, Kuang Fu Rd., San Chung, Taipei, Taiwan, R.O.C.
Tel: 886-2-2999 8918 Fax: 886-2-2999 8955

RP1160 Dimensions

165 x 85 x 40 mm.

Ver.

Page 1/1